RED One Digital Cinema Camera

Acquisition Pipelines

specs and workflow subject to change

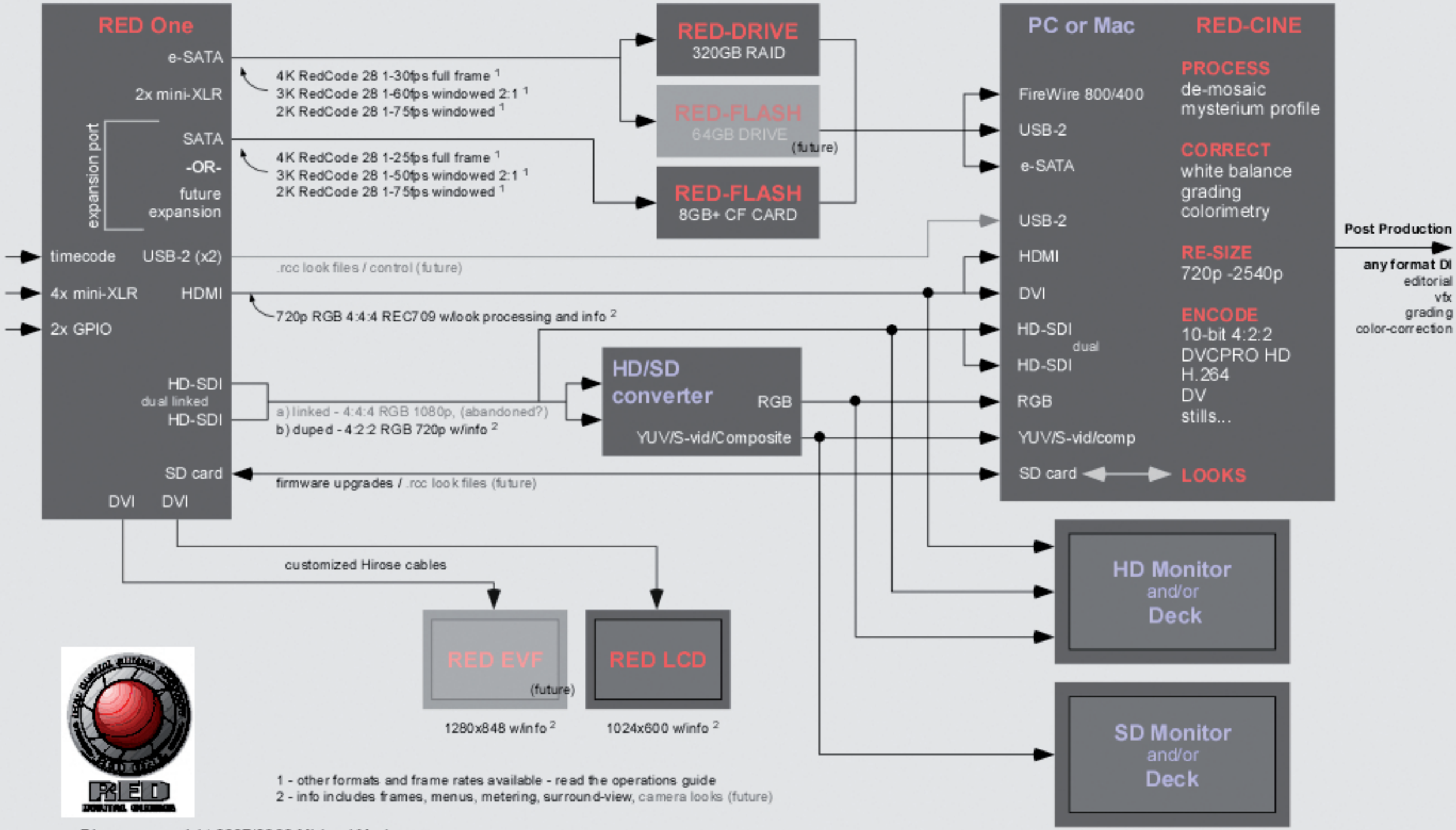

1 - other formats and frame rates available - read the operations guide
2 - info includes frames, menus, metering, surround-view, camera looks (future)

Diagram copyright 2007/2008 Michael Morlan
Red logo and gear trademark of Red Digital Cinema

diagram v24 Feb 2008
RED One firmware build 14

512-791-4121
michael@michael-morlan.net

Michael Morlan

www.michael-morlan.net
www.austinfilmtools.com